10

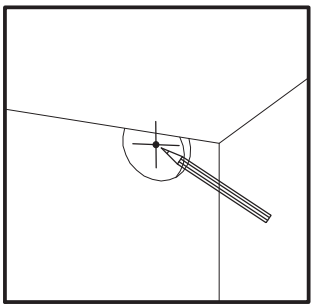

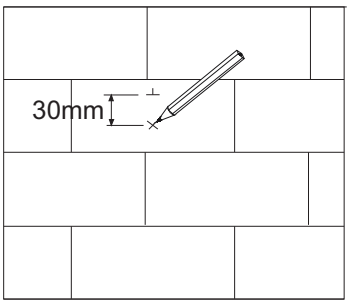
30mm

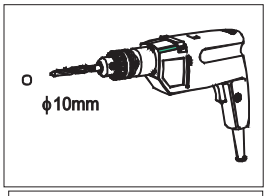
ϕ10mm

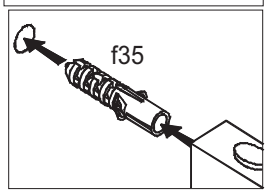
f35

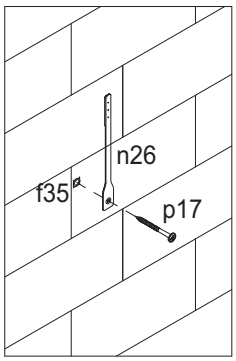
n26
f35
p17

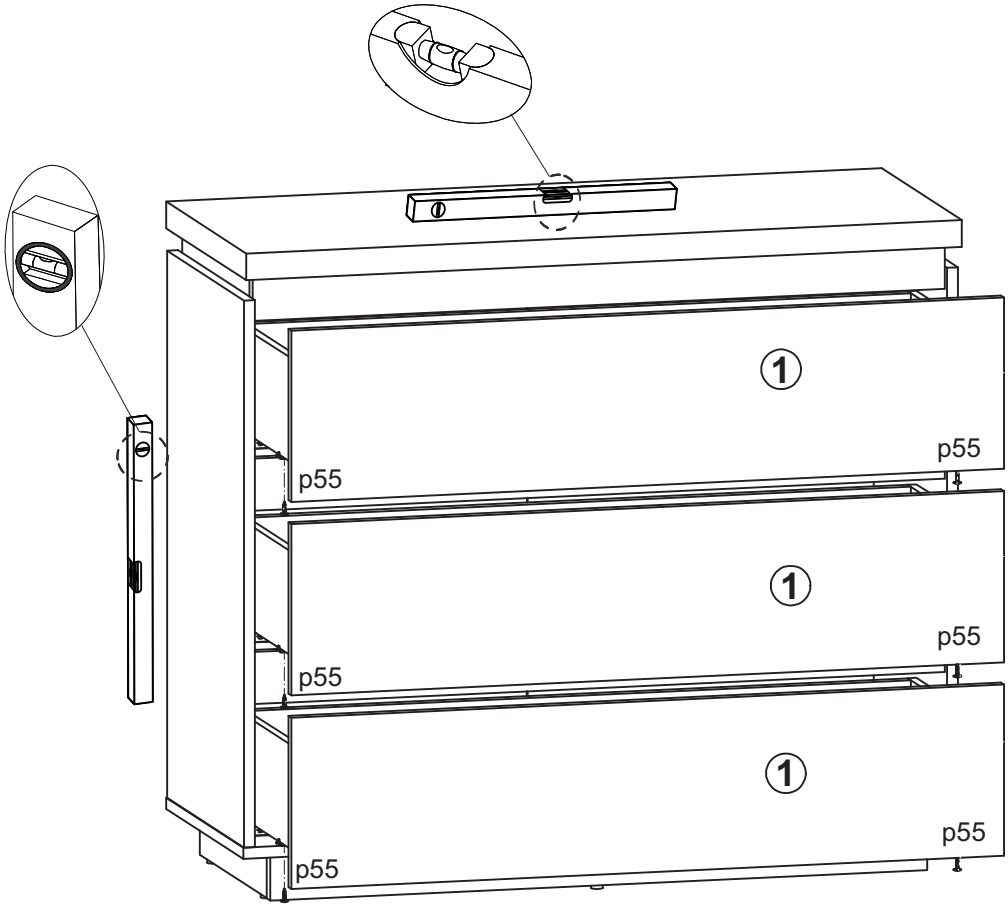
1
p55
p55
1
p55
p55
1
p55
p55

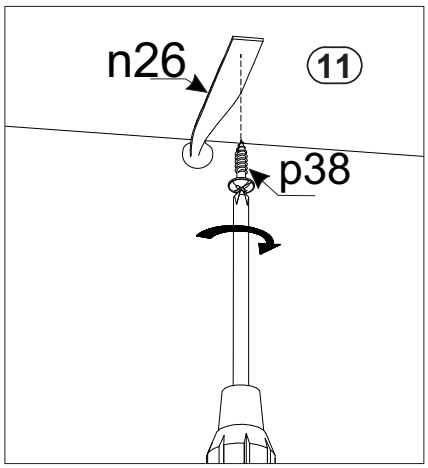
n26
11
p38

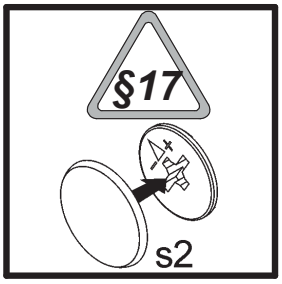
§17
s2

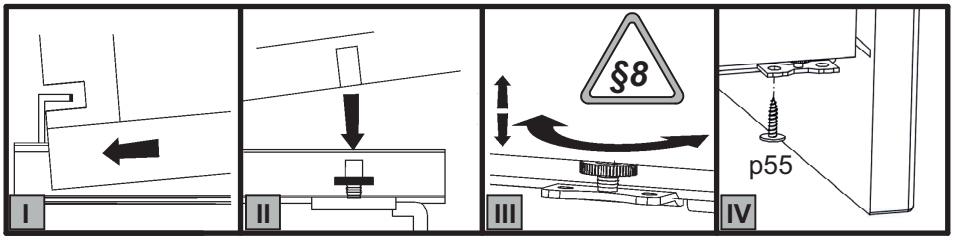
I
II
§8
III
p55
IV